3-loop master integrals for H+jet production at N3LO: Towards the non-planar topologies

Nikolaos Syrrakos
in collaboration with Thomas Gehrmann, Dhimiter Canko, Petr Jakubčík, Cesare Carlo Mella, Lorenzo Tancredi.

Technical University Munich

RADCOR 2023 – 16th International Symposium on Radiative Corrections: Applications of Quantum Field Theory to Phenomenology, 30.05.2023

Introduction

- **Goal**: 3-loop corrections to $gg \to Hg$, $q\bar{q} \to Hg$ $(m_t \to \infty)$.
- **Goal**: 3-loop corrections to $gg \to Zg$, $q\bar{q} \to Zg$.

Introduction

- **Goal**: 3-loop corrections to $gg \to Hg$, $q\bar{q} \to Hg$ $(m_t \to \infty)$.
- **Goal**: 3-loop corrections to $gg \to Zg$, $q\bar{q} \to Zg$.
- $d = 4 - 2\epsilon$: *tree+1-loop* $\mathcal{O}(\epsilon^4)$+*2-loop* $\mathcal{O}(\epsilon^2)$+*3-loop* $\mathcal{O}(\epsilon^0)$.

Introduction

- **Goal**: 3-loop corrections to $gg \to Hg$, $q\bar{q} \to Hg$ $(m_t \to \infty)$.
- **Goal**: 3-loop corrections to $gg \to Zg$, $q\bar{q} \to Zg$.
- $d = 4 - 2\epsilon$: *tree+1-loop* $\mathcal{O}(\epsilon^4)$+*2-loop* $\mathcal{O}(\epsilon^2)$+*3-loop* $\mathcal{O}(\epsilon^0)$.
- T. Gehrmann, P. Jakubčík, C. C. Mella, NS and L. Tancredi, JHEP **04** (2023), 016.

Introduction

- **Goal**: 3-loop corrections to $gg \to Hg$, $q\bar{q} \to Hg$ ($m_t \to \infty$).
- **Goal**: 3-loop corrections to $gg \to Zg$, $q\bar{q} \to Zg$.
- $d = 4 - 2\epsilon$: *tree+1-loop* $\mathcal{O}(\epsilon^4)$+*2-loop* $\mathcal{O}(\epsilon^2)$+*3-loop* $\mathcal{O}(\epsilon^0)$.
- T. Gehrmann, P. Jakubčík, C. C. Mella, NS and L. Tancredi, JHEP **04** (2023), 016.
- Projector method for amplitudes

$$\mathcal{A}(p_1, p_2, p_3) = \sum_{i=1}^{N} \mathcal{F}_i(p_1, p_2, p_3)\mathcal{T}_i \tag{1}$$

$$\mathcal{P}_j = \sum_{i=1}^{N} c_i^{(j)}(d; p_1, p_2, p_3)\mathcal{T}_i^{\dagger} \tag{2}$$

$$\sum_{\text{pol}} \mathcal{P}_j \mathcal{A}(p_1, p_2, p_3) = \mathcal{F}_j(p_1, p_2, p_3) \tag{3}$$

Introduction

- Form factors $\mathcal{F}_i(p_1, p_2, p_3)$ expressed in terms of a large number of scalar Feynman integrals.

$$\mathrm{I}_{a_1,\ldots,a_{15}} = \int \left(\prod_{l=1}^{3} (-M_V^2)^{-\epsilon} e^{\gamma_E \epsilon} \frac{\mathrm{d}^d k_l}{i\pi^{d/2}} \right) \prod_{i=1}^{15} D_i^{-a_i}. \tag{4}$$

Introduction

- Form factors $\mathcal{F}_i(p_1, p_2, p_3)$ expressed in terms of a large number of scalar Feynman integrals.

$$\mathrm{I}_{a_1,\ldots,a_{15}} = \int \left(\prod_{l=1}^{3} (-M_V^2)^{-\epsilon} e^{\gamma_E \epsilon} \frac{\mathrm{d}^d k_l}{i\pi^{d/2}} \right) \prod_{i=1}^{15} D_i^{-a_i}. \tag{4}$$

- **V+jet@3loops**: 1 planar + 4 non-planar integral families.

Introduction

- Form factors $\mathcal{F}_i(p_1, p_2, p_3)$ expressed in terms of a large number of scalar Feynman integrals.

$$\mathrm{I}_{a_1,\ldots,a_{15}} = \int \left(\prod_{l=1}^{3} (-M_V^2)^{-\epsilon} e^{\gamma_E \epsilon} \frac{\mathrm{d}^d k_l}{i\pi^{d/2}} \right) \prod_{i=1}^{15} D_i^{-a_i}. \tag{4}$$

- **V+jet@3loops**: 1 planar + 4 non-planar integral families.

	IR top sectors	R top sectors	MI
PL	3	17	291
NPL1	5	1	414
NPL1c34	3	1	328
NPL2	5	8	781
NPL2c24	2	1	412
Total	**18**	**28**	**2226**

Introduction

- Form factors $\mathcal{F}_i(p_1, p_2, p_3)$ expressed in terms of a large number of scalar Feynman integrals.

$$\mathrm{I}_{a_1,\ldots,a_{15}} = \int \left(\prod_{l=1}^{3} (-M_V^2)^{-\epsilon} e^{\gamma_E \epsilon} \frac{\mathrm{d}^d k_l}{i\pi^{d/2}} \right) \prod_{i=1}^{15} D_i^{-a_i}. \tag{4}$$

- **V+jet@3loops**: 1 planar + 4 non-planar integral families.

	IR top sectors	R top sectors	MI
PL	3	17	291
NPL1	5	1	414
NPL1c34	3	1	328
NPL2	5	8	781
NPL2c24	2	1	412
Total	**18**	**28**	**2226**

Without considering any crossings!

Notation & kinematics

$$V(p_4) \to g_1(p_1) + g_2(p_2) + g_3(p_3),\ V(p_4) \to q(p_1) + \bar{q}(p_2) + g(p_3).$$

Notation & kinematics

$V(p_4) \to g_1(p_1) + g_2(p_2) + g_3(p_3),\ V(p_4) \to q(p_1) + \bar{q}(p_2) + g(p_3).$

- $\sum_{i=1}^{4} p_i = 0,\ p_4^2 = M_V^2,\ p_i^2 = 0$ for $i = 1, 2, 3,\ s_{ij} = (p_i + p_j)^2.$

$$x = \frac{s_{12}}{M_V^2}, \qquad y = \frac{s_{13}}{M_V^2}, \qquad z = \frac{s_{23}}{M_V^2}. \tag{5}$$

Notation & kinematics

$V(p_4) \to g_1(p_1) + g_2(p_2) + g_3(p_3),\ V(p_4) \to q(p_1) + \bar{q}(p_2) + g(p_3).$

- $\sum_{i=1}^{4} p_i = 0,\ p_4^2 = M_V^2,\ p_i^2 = 0$ for $i = 1, 2, 3,\ s_{ij} = (p_i + p_j)^2.$

$$x = \frac{s_{12}}{M_V^2}, \qquad y = \frac{s_{13}}{M_V^2}, \qquad z = \frac{s_{23}}{M_V^2}. \tag{5}$$

- Derive and solve canonical differential equations,

$$\mathrm{d}\vec{\mathrm{g}} = \epsilon A \vec{\mathrm{g}} = \epsilon \sum_i B_i \, \mathrm{d}\log(\alpha_i)\vec{\mathrm{g}}. \tag{6}$$

- Euclidean region:

$$0 < z < 1, \quad 0 < y < 1 - z, \quad x = 1 - y - z, \tag{7}$$

or

$$0 < z < 1, \quad 0 < x < 1 - z. \tag{8}$$

Irreducible planar top sectors

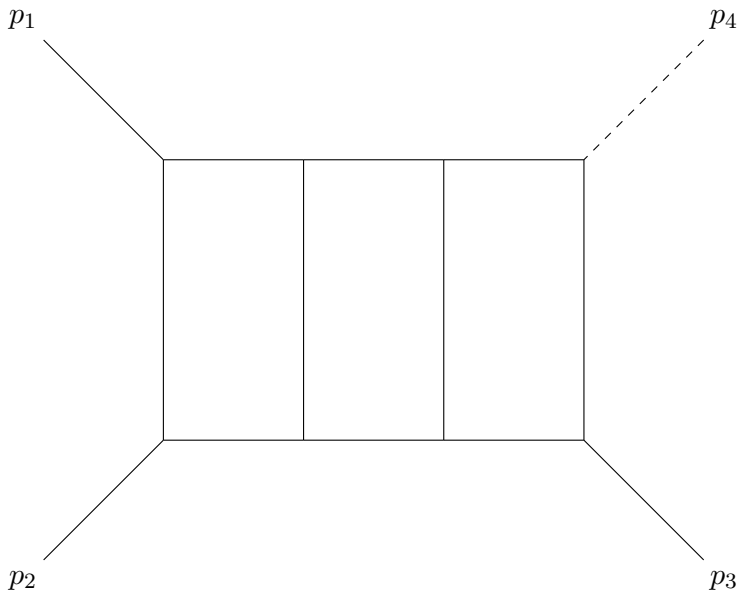

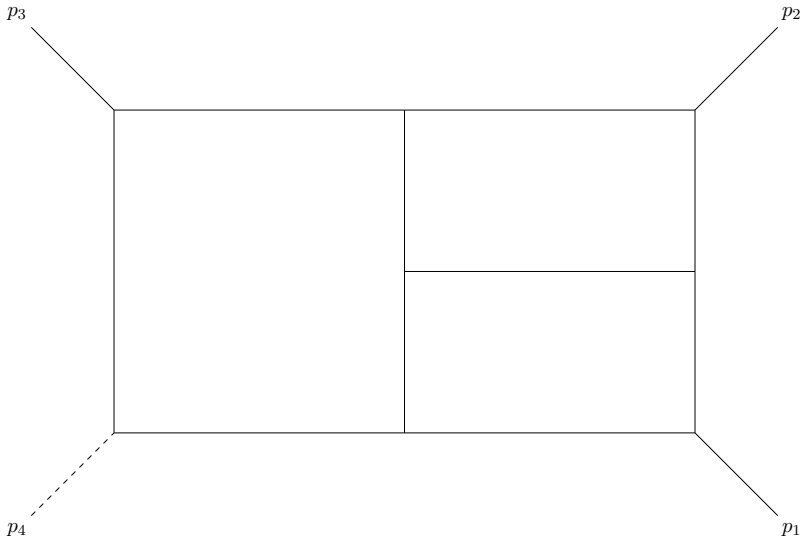

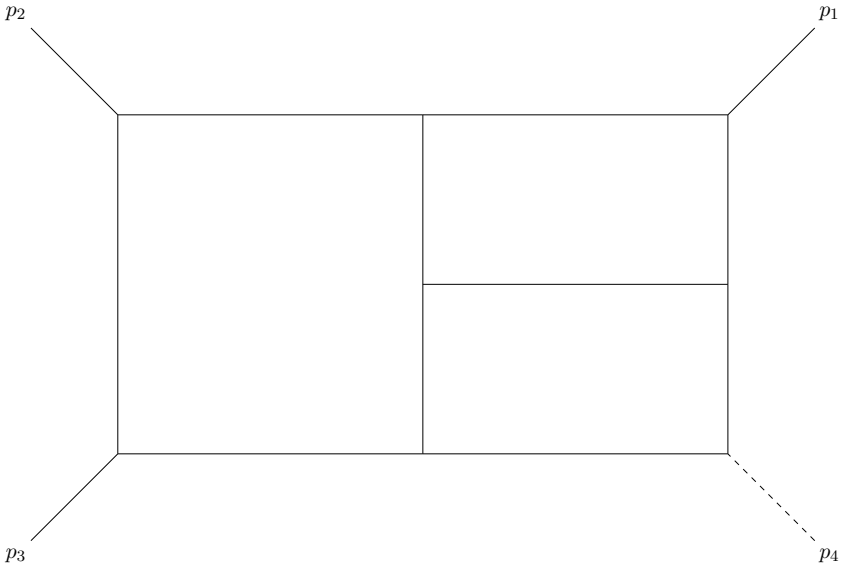

Planar master integrals

- 3 irreducible top sectors: 235 MI.
  - **Di Vita, Mastrolia, Schubert, Yundin, JHEP09(2014)148.**
  - **Canko and NS, JHEP04(2022)134.**

Planar master integrals

- 3 irreducible top sectors: 235 MI.
  - **Di Vita, Mastrolia, Schubert, Yundin, JHEP09(2014)148.**
  - **Canko and NS, JHEP04(2022)134.**
- 17 reducible top sectors: 56 MI from subsectors.

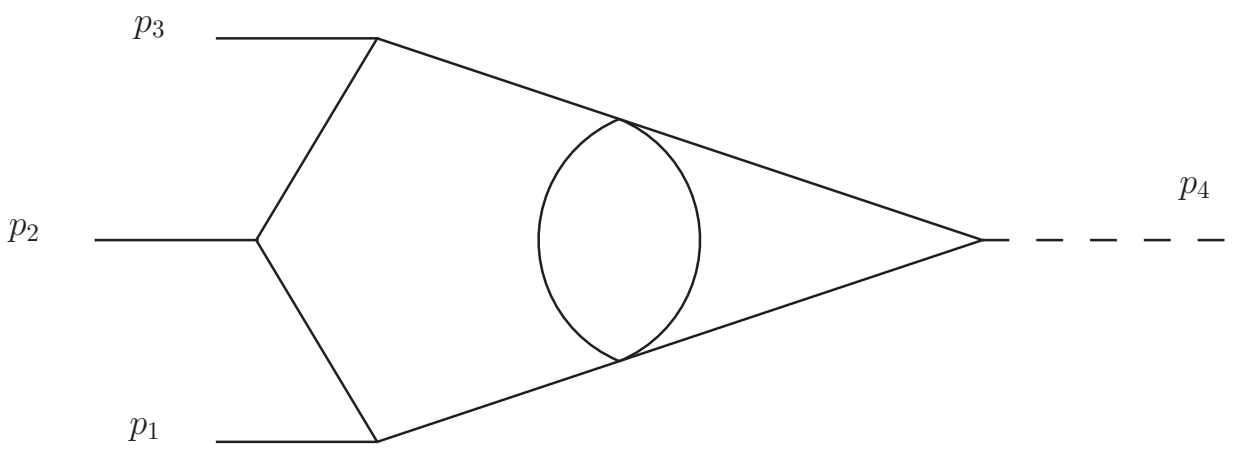

Planar master integrals

- Canonical basis of 291 master integrals.
- Same alphabet as in 2-loop case:

$$\{y, z, 1-y, 1-z, 1-y-z, y+z\}.$$

- Boundary conditions through regularity constraints

$$\{y \to 0,\ y \to 1,\ y \to -z,\ z \to 1\}.$$

- Analytic results in terms of MPLs for all crossings up to weight 6.

$$G(a_1, a_2, \ldots, a_n; x) = \int_0^x \frac{\mathrm{dt}}{t - a_1} G(a_2, \ldots, a_n; t) \tag{9}$$

$$G(0, \ldots, 0; x) = \frac{1}{n!} \log^n(x) \tag{10}$$

Non-planar top sectors

	IR top sectors	R top sectors	MI
NPL1	5	1	414
NPL1c34	3	1	328
NPL2	5	8	781
NPL2c24	2	1	412
Total	**15**	**11**	**1935**

Non-planar top sectors

	IR top sectors	R top sectors	MI
NPL1	5	1	414
NPL1c34	3	1	328
NPL2	5	8	781
NPL2c24	2	1	412
Total	**15**	**11**	**1935**

- Easier to consider individual top sectors for canonical bases.
- Starting point: Ignore subsector contributions from R top sectors.

Non-planar top sectors

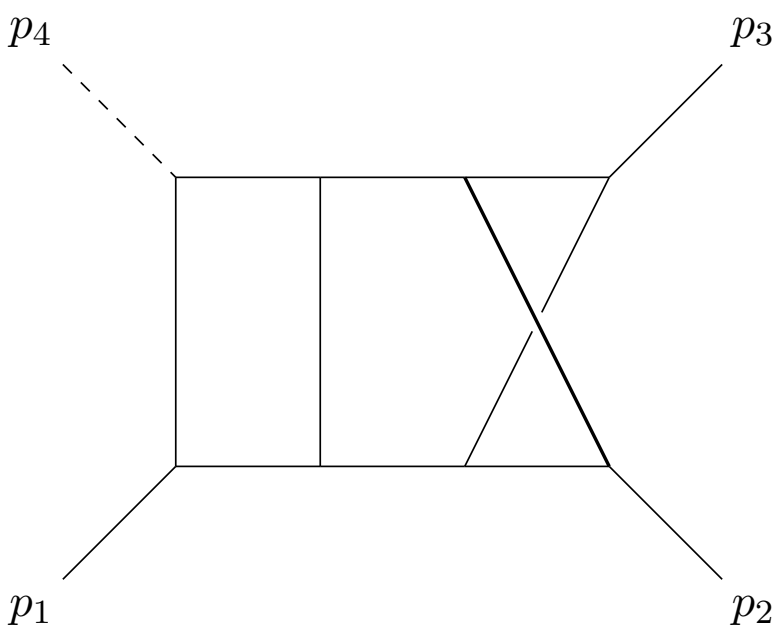

(a) NPL2c24_15055

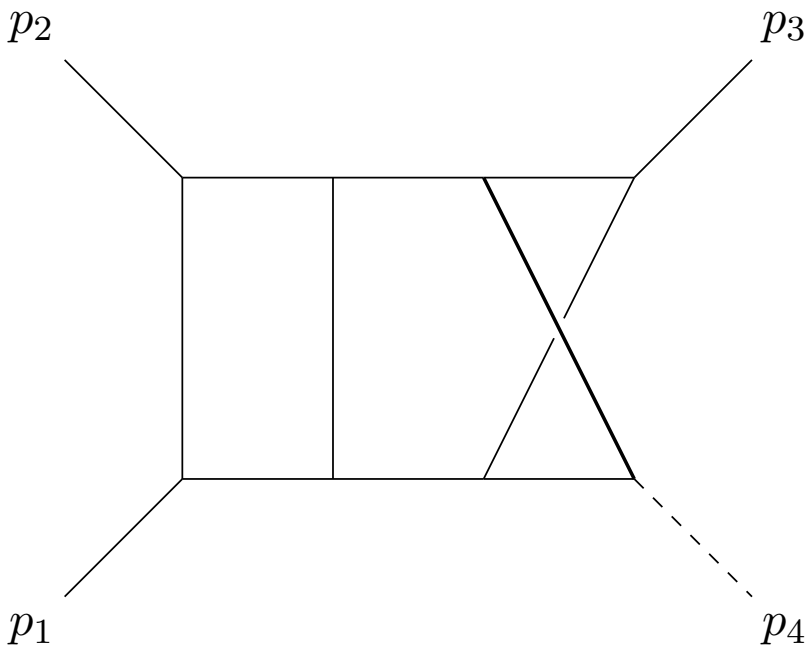

(b) NPL2_15055

Non-planar top sectors

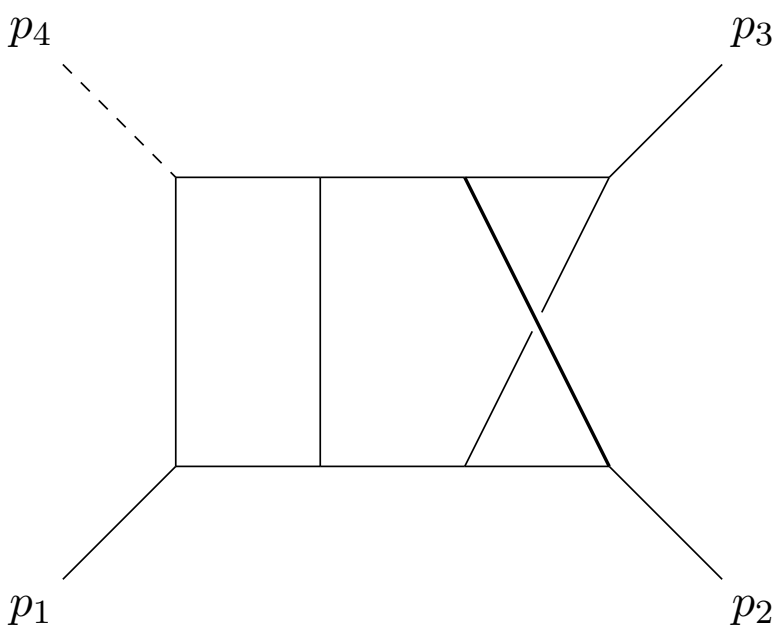

(a) NPL2c24_15055

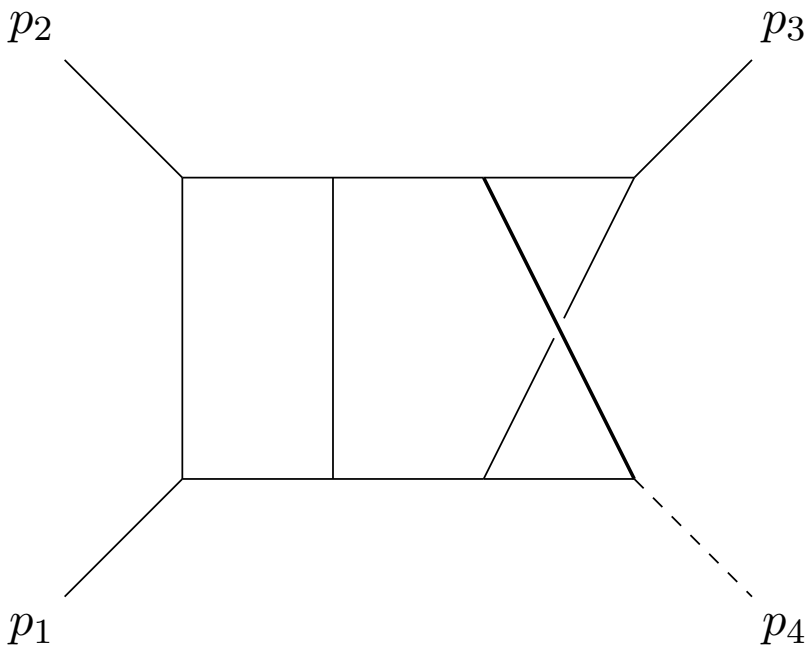

(b) NPL2_15055

J. M. Henn, J. Lim and W. J. Torres Bobadilla, JHEP 05 (2023), 026.

Non-planar top sectors

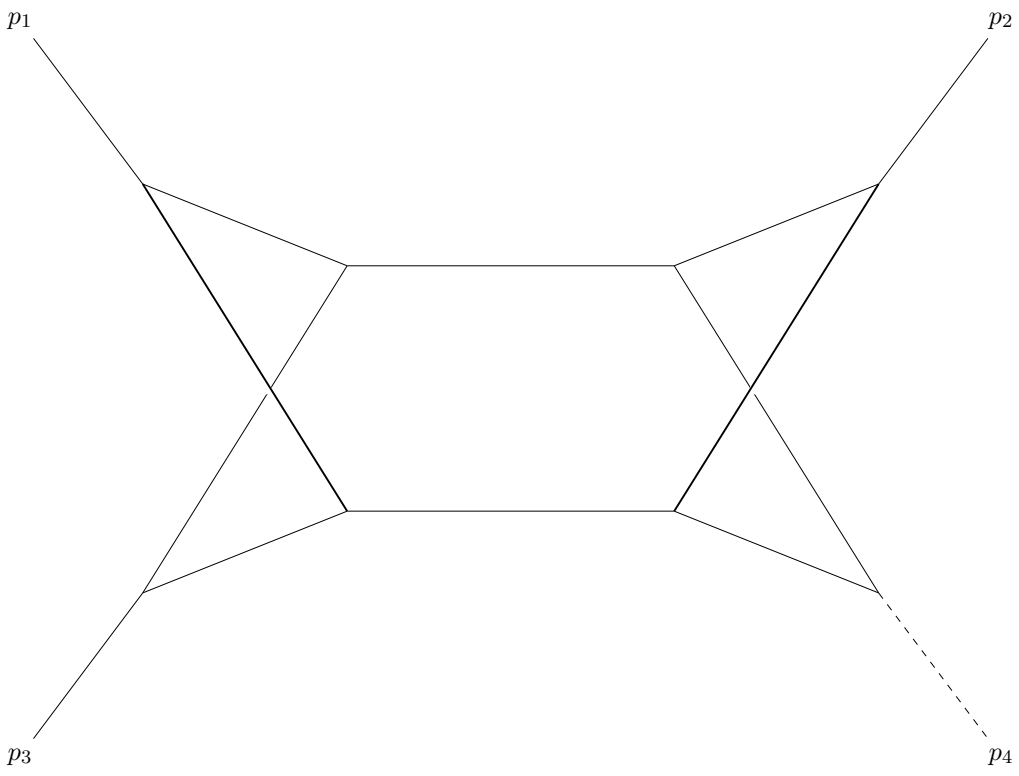

Figure: NPL2_8121

NPL2c24_15055, NPL2_15055

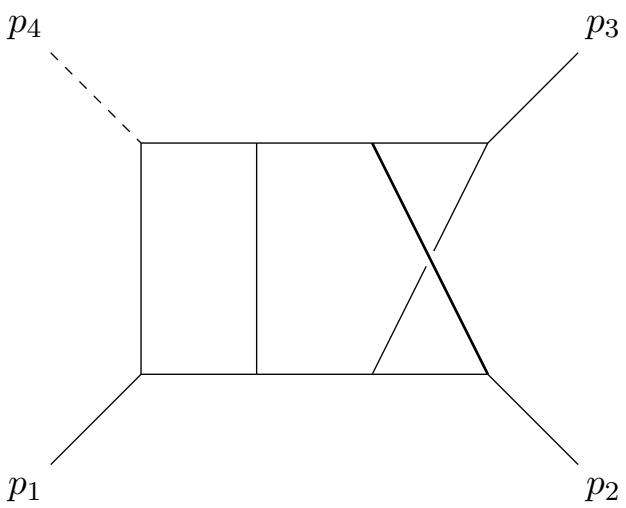

(a) NPL2c24_15055

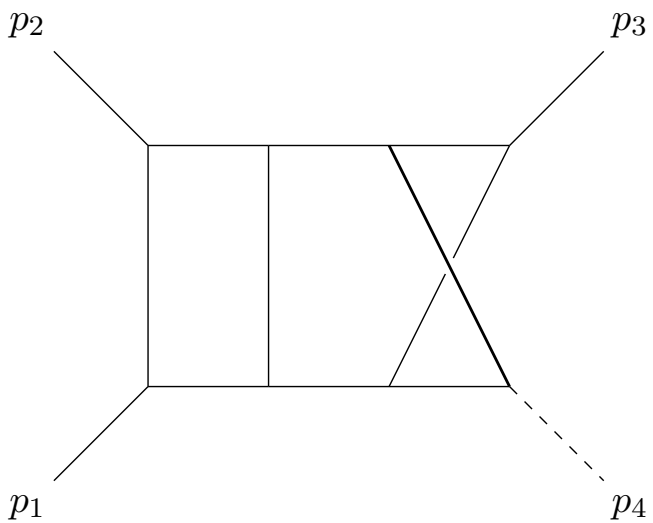

(b) NPL2_15055

- NPL2c24_15055: 114 MI, 4 at the top sector.
- NPL2_15055: 150 MI, 4 at the top sector.

NPL2c24_15055, NPL2_15055

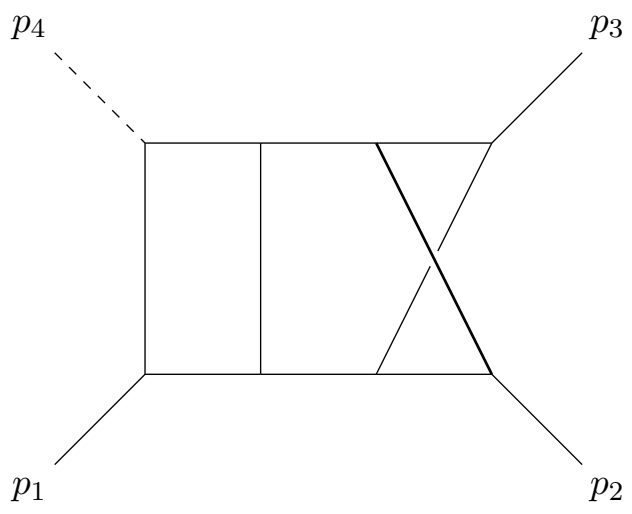

(a) NPL2c24_15055

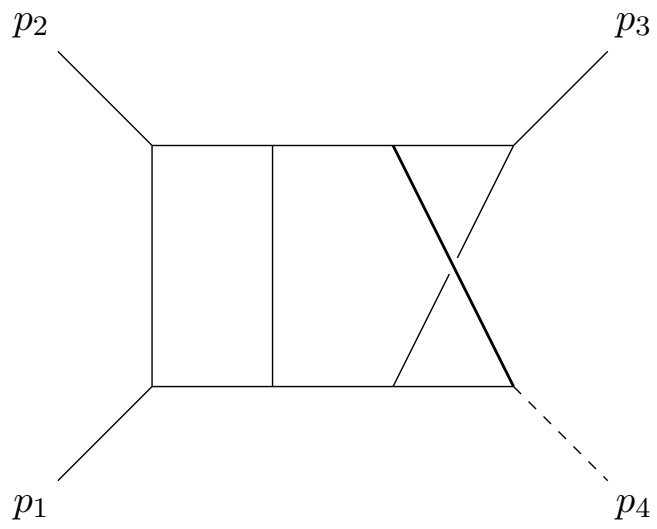

(b) NPL2_15055

- NPL2c24_15055: 114 MI, 4 at the top sector.
- NPL2_15055: 150 MI, 4 at the top sector.
- DlogBasis for sectors with up to 9 propagators.
- Loop-by-loop analysis in $d = 4$ for top sector.

IBP reduction for DE

- Standard use of IBP reduction programs is not efficient.

IBP reduction for DE

- Standard use of IBP reduction programs is not efficient.
- Direct IBP reduction of canonical DE (Kira, Reduze, Mathematica):
  1. Generate IBPs with Kira.
  2. Collect FI from canonical basis and compute derivatives with Reduze.
  3. Construct unreduced canonical DE with Mathematica.
  4. Feed IBPs and DE to Kira as a user-defined system.

IBP reduction for DE

- Standard use of IBP reduction programs is not efficient.
- Direct IBP reduction of canonical DE (Kira, Reduze, Mathematica):
  1. Generate IBPs with Kira.
  2. Collect FI from canonical basis and compute derivatives with Reduze.
  3. Construct unreduced canonical DE with Mathematica.
  4. Feed IBPs and DE to Kira as a user-defined system.
- 3.6h to generate $\sim \mathcal{O}(9 \cdot 10^7)$ IBPs/family.
- 11h & 19h DE reduction (s_{12}, s_{23}, M_V^2), (50 CPU cores).

Canonical DE

- Same alphabet as PL for NPL2c24_15055:

$$\{x, z, 1-x, 1-z, 1-x-z, x+z\}.$$

Canonical DE

- Same alphabet as PL for NPL2c24_15055:

$$\{x, z, 1-x, 1-z, 1-x-z, x+z\}.$$

- Two new quadratic letters in s_{12} ($x = s_{12}/M_V^2$) for NPL2_15055:

$$\{x, z, 1-x, 1-z, 1-x-z, x+z, 1-2x+x^2-z, x-x^2-z\}$$

Fixing boundaries

- DE in dlog form: $\mathrm{d}\vec{\mathrm{g}} = \epsilon A \vec{\mathrm{g}}$, with $A = \sum_i B_i \, \mathrm{d}\log(\alpha_i)$.
- Branch points at $z = 0$, $z = 1 - x$, $x = 0$.
- Study the solution of DE at $\alpha_i = 0$:

$$\exp\{\epsilon B_i \log(\alpha_i)\}\vec{\mathrm{g}}|_{\alpha_i=0}$$

- $C_i = \exp\{\epsilon B_i \log(\alpha_i)\}$ has terms $\alpha_i^{n_i \epsilon}$, n_i eigenvalues of B_i.

Fixing boundaries

- DE in dlog form: $\mathrm{d}\vec{\mathrm{g}} = \epsilon A \vec{\mathrm{g}}$, with $A = \sum_i B_i \, \mathrm{d}\log(\alpha_i)$.
- Branch points at $z = 0$, $z = 1 - x$, $x = 0$.
- Study the solution of DE at $\alpha_i = 0$:

$$\exp\{\epsilon B_i \log(\alpha_i)\}\vec{\mathrm{g}}|_{\alpha_i=0}$$

- $C_i = \exp\{\epsilon B_i \log(\alpha_i)\}$ has terms $\alpha_i^{n_i \epsilon}$, n_i eigenvalues of B_i.
  1. Un-physical singularities $\{z = -x, z = 1, x = 1\}$, $\alpha_i^{n_i \epsilon}$ with $n_i \neq 0$ must vanish at $\vec{\mathrm{g}}|_{\alpha_i=0}$.
  2. Physical singularities $\{z = 0,\ z = 1 - x,\ x = 0\}$, $\alpha_i^{n_i \epsilon}$ with $n_i > 0$ must vanish at $\vec{\mathrm{g}}|_{\alpha_i=0}$.

Fixing boundaries

- DE in dlog form: $\mathrm{d}\vec{\mathrm{g}} = \epsilon A \vec{\mathrm{g}}$, with $A = \sum_i B_i \, \mathrm{d}\log(\alpha_i)$.
- Branch points at $z = 0$, $z = 1 - x$, $x = 0$.
- Study the solution of DE at $\alpha_i = 0$:

$$\exp\{\epsilon B_i \log(\alpha_i)\}\vec{\mathrm{g}}|_{\alpha_i=0}$$

- $C_i = \exp\{\epsilon B_i \log(\alpha_i)\}$ has terms $\alpha_i^{n_i \epsilon}$, n_i eigenvalues of B_i.
  1. Un-physical singularities $\{z = -x, z = 1, x = 1\}$, $\alpha_i^{n_i \epsilon}$ with $n_i \neq 0$ must vanish at $\vec{\mathrm{g}}|_{\alpha_i=0}$.
  2. Physical singularities $\{z = 0,\ z = 1 - x,\ x = 0\}$, $\alpha_i^{n_i \epsilon}$ with $n_i > 0$ must vanish at $\vec{\mathrm{g}}|_{\alpha_i=0}$.
- Analytic results in terms of MPLs up to weight 6.

NPL2_8121

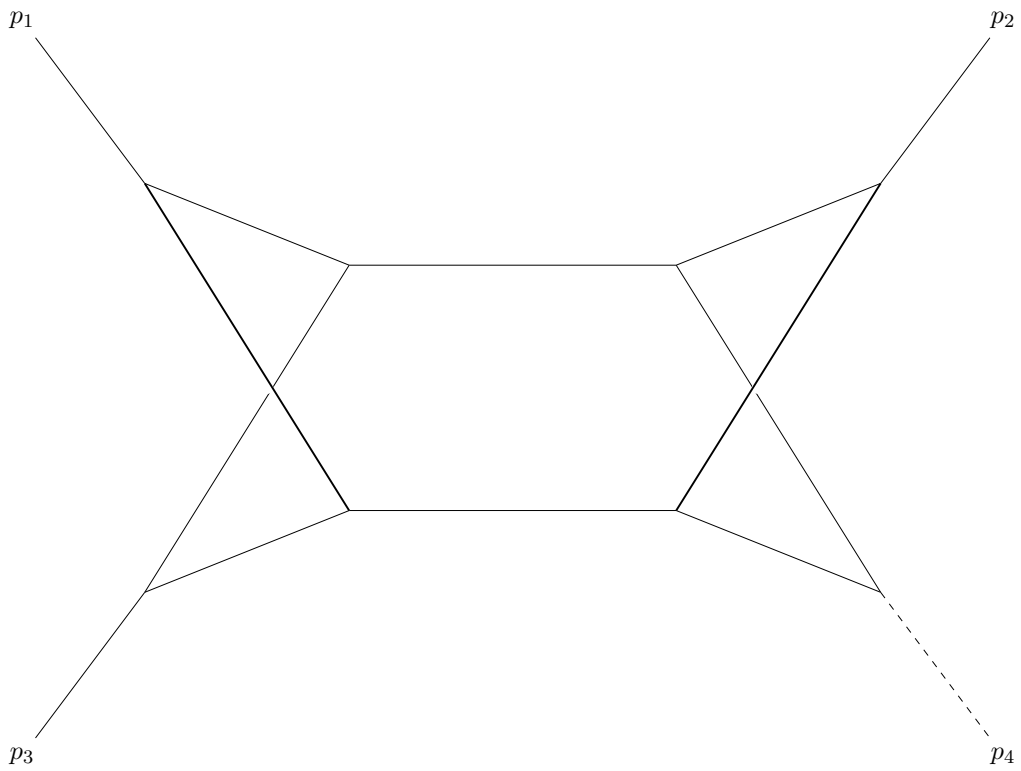

- 121 MI, 3 at top sector.

NPL2_8121

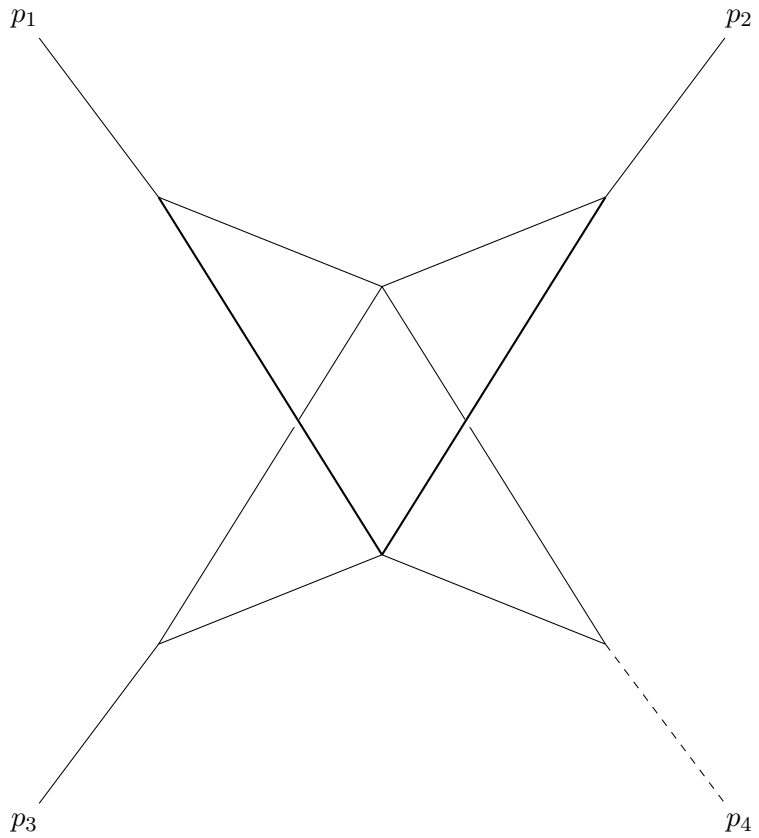

Figure: NPL2_4009

- LS: $\sqrt{M_V^2\, s_{12}\, s_{23}\, s_{13}}$

NPL2_16297

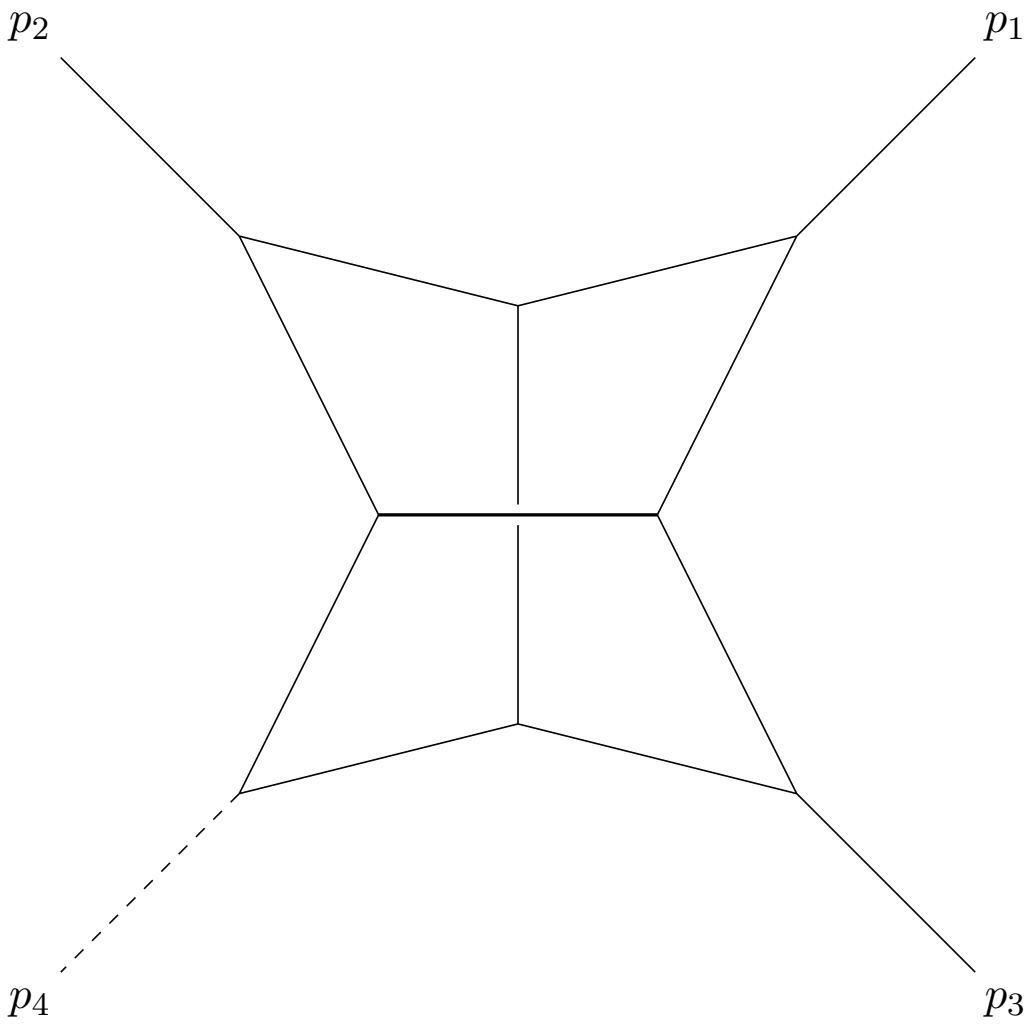

- 371 MI, **19 at top sector!**

Conclusions

- Analytic results for all planar master integrals (max. W=6).

Conclusions

- Analytic results for all planar master integrals (max. W=6).
- IBP setup for direct reduction of canonical DE.

Conclusions

- Analytic results for all planar master integrals (max. W=6).
- IBP setup for direct reduction of canonical DE.
- Analytic results for two ladder-like non-planar top sectors (max. W=6).

Conclusions

- Analytic results for all planar master integrals (max. W=6).
- IBP setup for direct reduction of canonical DE.
- Analytic results for two ladder-like non-planar top sectors (max. W=6).
- New letters quadratic in s_{12} & $\sqrt{M_H^2\, s_{12}\, s_{23}\, s_{13}}$.

Conclusions

- Analytic results for all planar master integrals (max. W=6).
- IBP setup for direct reduction of canonical DE.
- Analytic results for two ladder-like non-planar top sectors (max. W=6).
- New letters quadratic in s_{12} & $\sqrt{M_H^2\, s_{12}\, s_{23}\, s_{13}}$.
- Sectors with many MI.

Conclusions

- Analytic results for all planar master integrals (max. W=6).
- IBP setup for direct reduction of canonical DE.
- Analytic results for two ladder-like non-planar top sectors (max. W=6).
- New letters quadratic in s_{12} & $\sqrt{M_H^2\, s_{12}\, s_{23}\, s_{13}}$.
- Sectors with many MI.

Thank you for your attention!